Wonder-Gun W301-ES-26-LC Specifications

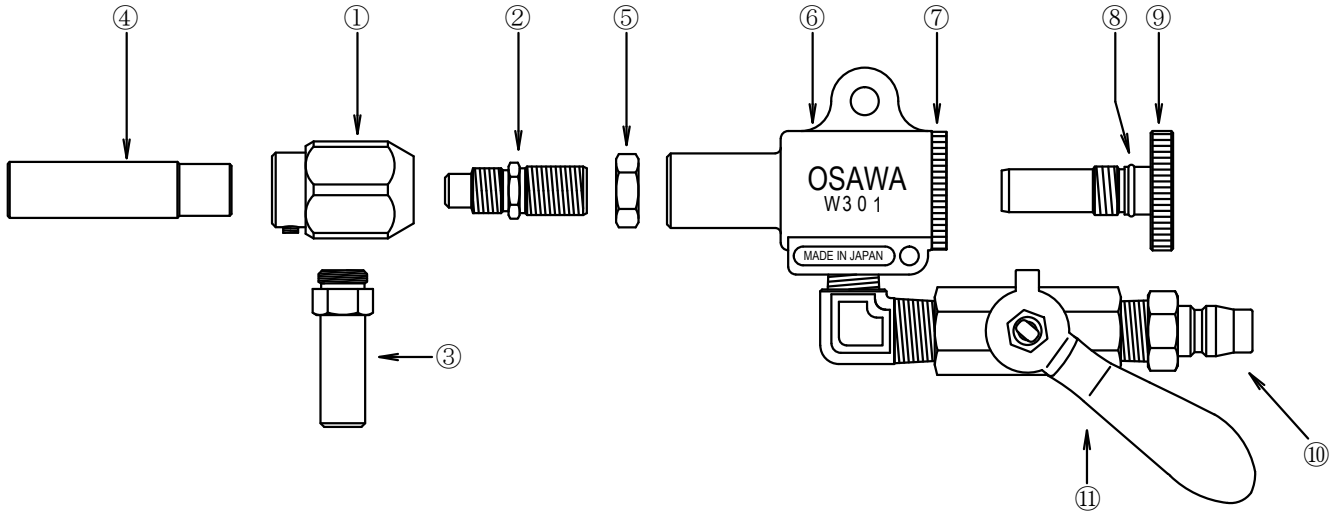

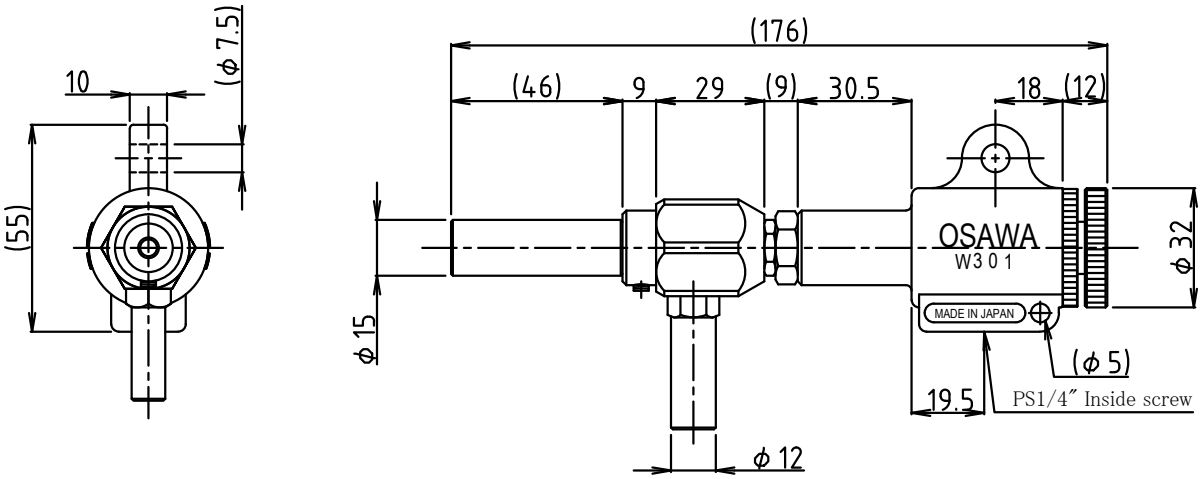

①～⑤ make Unit Assembly.

⑪	Ball valve	Brass 3/8″
⑩	Air valve	Iron (Chrome plating)
⑨	Air adjustment knob	Aluminium
⑧	O ring	NBR S-10
⑦	Set column	Aluminium
⑥	Wonder-Gun body	Aluminium alloy ・ADC-12
⑤	Nut	Brass (Chrome plating)
④	Jet nozzle	Iron ・SK4 (Quench hardening)
③	Suction nozzle	Stainless ・SUS304
②	Air jet nozzle	Stainless ・SUS304
①	Unit main body	Stainless ・SUS304
	Name of article	Material ・ Summaries

Customer:

Issue Date

Description:

Drawn by:

Directed by:

Approval:

Drawing date: 2008/12/18

Scale: — —

Drawing Number ESI-10111-2

OSAWA&COMPANY 1-7-28 YUNAGI MINATO-KU OSAKA 552-0004 JAPAN
TEL +81-6-6572-1207 FAX +81-6-6572-1256