Wonder-Gun W101-YZ (without hose joint) Specifications

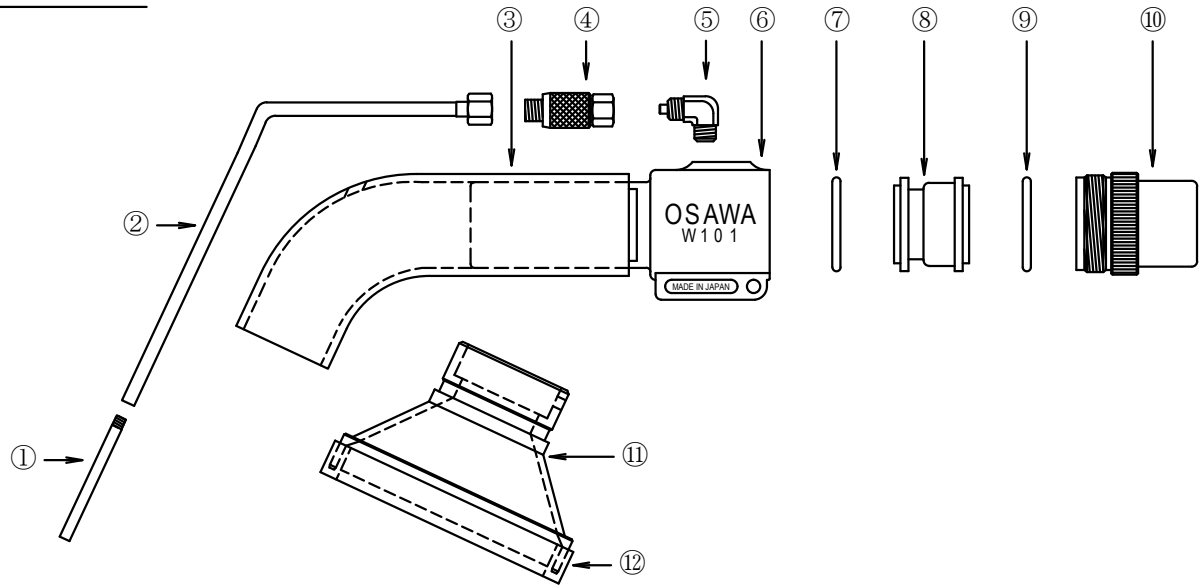

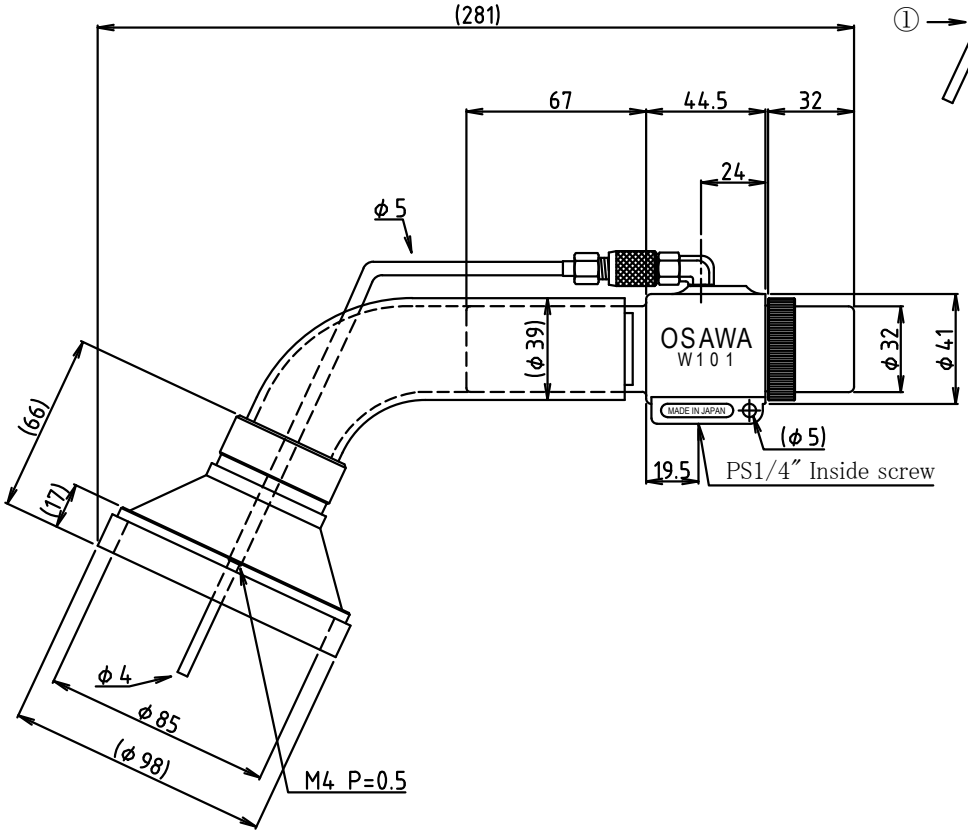

⑫	Wide mouth rubber packing	Chloroprene rubber
⑪	Wide mouth metal fitting	Aluminum casting
⑩	Set column	Aluminum(Anodic oxide coating)
⑨	O ring	NBR G-30
⑧	Suction nozzle	Aluminum
⑦	O ring	NBR G-30
⑥	Wonder-Gun body	Aluminum・ADC-12
⑤	Air blow nozzle elbow	Brass (Chromate conversion coating)
④	Air adjustment valve	Brass (Chromate conversion coating)
③	Suction pipe	Transparent PVC
②	Air blow nozzle	Brass (Chromate conversion coating)
①	Air blow nozzle tip	Brass (Chrome plating)
	Name of article	Material・Summaries

Customer:

Issue Date

Description:

Drawn by:

Directed by:

Approval:

Drawing date: 2008/06/17

Scale: — —

Drawing Number ESI-10067-2

OSAWA&COMPANY 1-7-28 YUNAGI MINATO-KU OSAKA 552-0004 JAPAN
TEL +81-6-6572-1207 FAX +81-6-6572-1256