Wonder-Gun Dust Collector

W3-20 Specifications

2015/11/16

Item	Contents
① Lid top	Iron　Perforated metal and Filter element
② Lid body	Iron casting　Melamine resin baking finish(Blue)
③ Metal fitting	Iron (Chromate conversion coating)
Weight	6.7kg

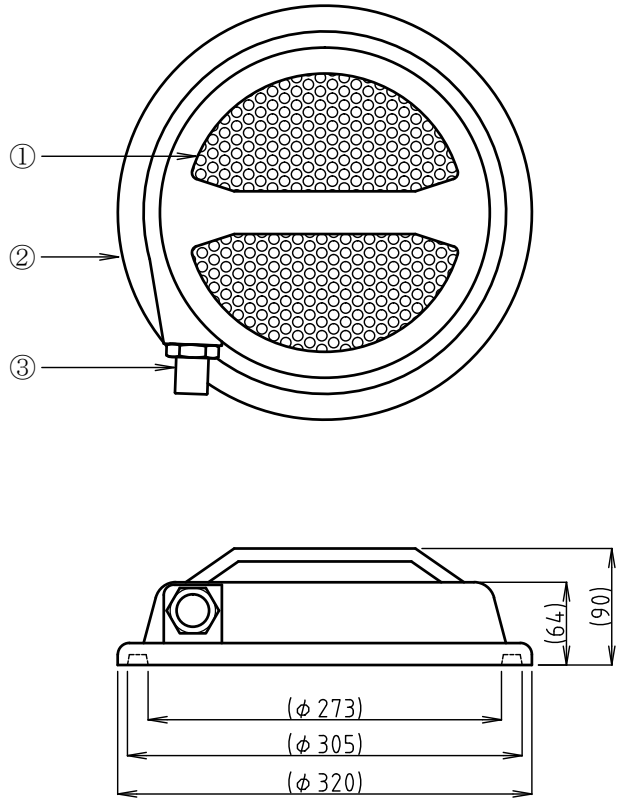

Remarks

- Wonder-Gun Dust Collector can't handle liquids or powders.
  Please use Silent-Cleaner or Mini-Porter-Cyclone for liquids and powders.
- Wonder-Gun Dust Collector can be used with W301 series.
- Please put W3-20 on a tank for operation.

OSAWA&COMPANY 1-7-28 YUNAGI MINATO-KU OSAKA 552-0004 JAPAN
TEL +81-6-6572-1207　FAX +81-6-6572-1256