Wonder-Gun YW501-S YW501-SG Specifications

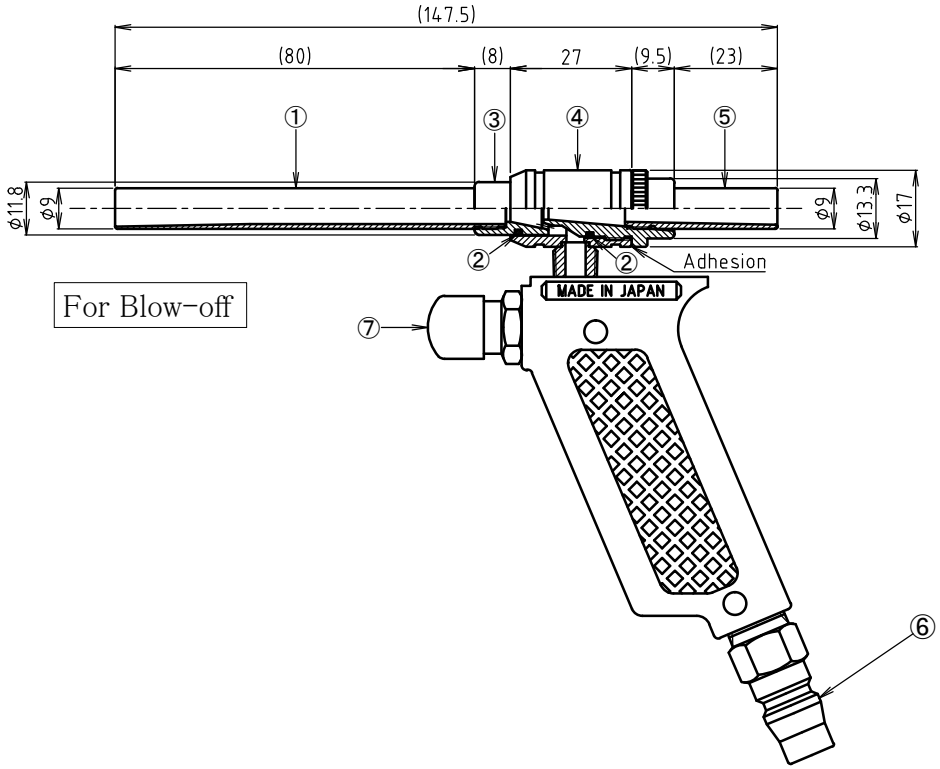

For Blow-off

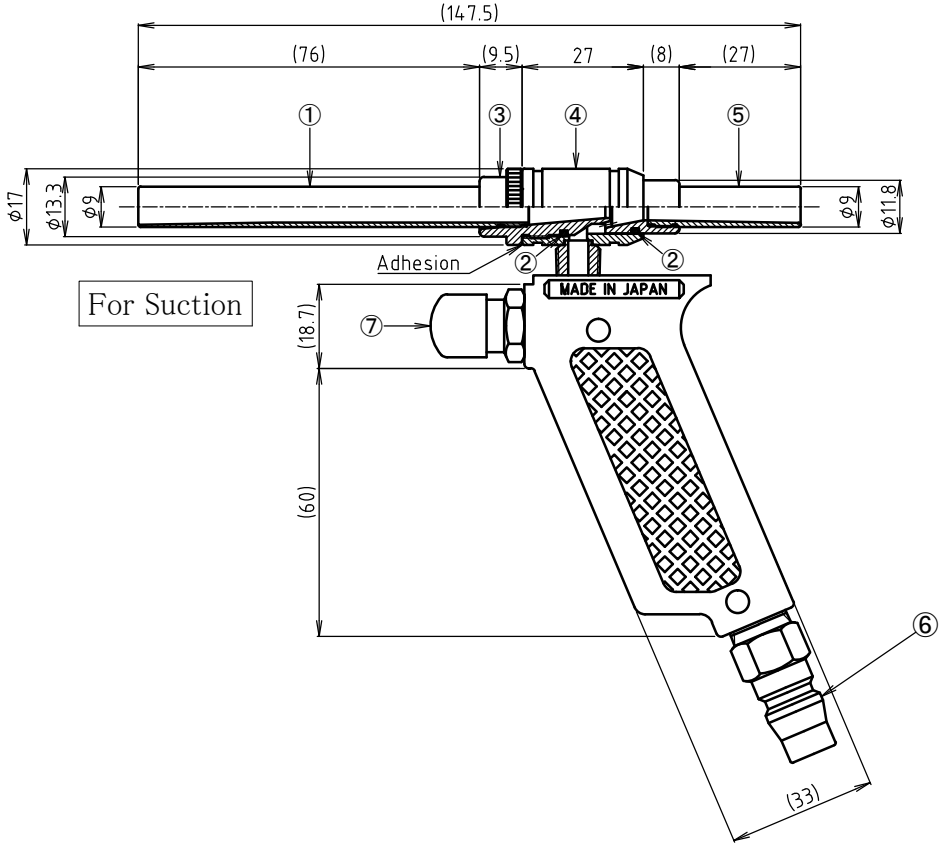

For Suction

⑦	Air valve	Brass (Chrome plating)
⑥	Air coupler	Iron (Chrome plating)
⑤	Nozzle (S)	Brass (Yellow chromate conversion coating)
④	Sleeve	Brass (Yellow chromate conversion coating)
③	Wonder-Gun body	Brass (Yellow chromate conversion coating) Minimum ID: φ5
②	O ring	NBR S-9 2pieces
①	Nozzle (L)	Brass (Yellow chromate conversion coating)
	Nozzle orifice	YW501-S φ1.2×3 holes
		YW501-SG φ1.2×6 holes
	Weight	220g
	Name of article	Material・Summaries

YW501-S ・YW501-SG is used for Blow-off version or Suction version.
Please make sure which version you need when you order.

Customer:

Issue Date

Description:

Drawn by:

Directed by:

Approval:

Drawing date:	Scale:	Drawing Number
2018/12/14	− −	ESI-97056-4

OSAWA & COMPANY 1-7-28 YUNAGI MINATO-KU OSAKA 552-0004 JAPAN
TEL (06)6572-1207 FAX (06)6572-1256